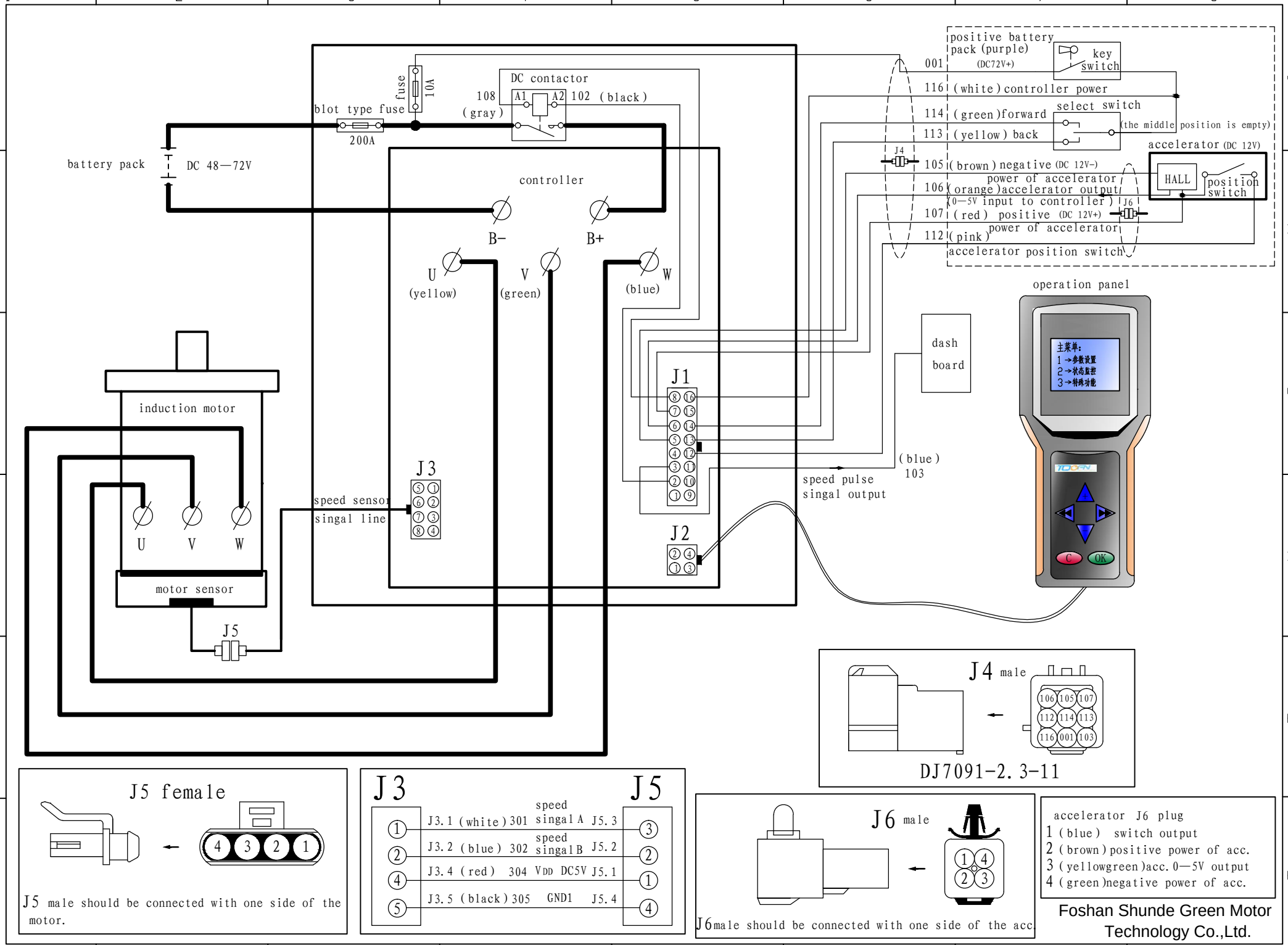
positive battery pack (purple)
(DC72V+)
key switch
001
116 (white) controller power
select switch
114 (green) forward
113 (yellow) back
(the middle position is empty)
accelerator (DC 12V)
J4
105 (brown) negative (DC 12V-)
106 (orange) power of accelerator output (0—5V input to controller)
107 (red) positive (DC 12V+)
112 (pink) power of accelerator
accelerator position switch
HALL
position switch
J6
DC contactor
A1
A2
108 (gray)
102 (black)
fuse
10A
blot type fuse
200A
battery pack
DC 48—72V
controller
B-
B+
U (yellow)
V (green)
W (blue)
J1
J2
J3
J5
dash board
operation panel
主菜单:
1→参数设置
2→状态监控
3→特殊功能
C
OK
(blue) 103
speed pulse singal output
speed sensor singal line
induction motor
U
V
W
motor sensor
J4 male
106 105 107
112 114 113
116 001 103
DJ7091-2.3-11
J5 female
4 3 2 1
J5 male should be connected with one side of the motor.
J3
J5
1 J3.1 (white) 301 speed singal A J5.3 3
2 J3.2 (blue) 302 speed singal B J5.2 2
4 J3.4 (red) 304 VDD DC5V J5.1 1
5 J3.5 (black) 305 GND1 J5.4 4
J6 male
1 4
2 3
J6 male should be connected with one side of the acc
accelerator J6 plug
1 (blue) switch output
2 (brown) positive power of acc.
3 (yellowgreen) acc. 0—5V output
4 (green) negative power of acc.
Foshan Shunde Green Motor Technology Co.,Ltd.